TELESCOPIC BOOM

H 23 TPX
H 25 TPX

- +70° / -70° fly jib.
- Standard 4 wheel drive.
- 507 lb (230 kg) platform capacity.
- 1ft 1in (35 cm) ground clearance.

H 23 TPX
H 25 TPX

Telescopic boom

The Haulotte advantages

- **Improved working area through a positive / negative articulating fly jib with 140° movement.**
- **Hydraulic differential lock and 1ft 1in (35 cm) ground clearance for improved rough terrain capability.**
- **Continuous 360° turntable rotation.**
- **180° hydraulique platform rotation.**
- **Compact travel/transport dimensions.**
- **Full proportional controls and simultaneous boom functions improve productivity.**
- **Work platform overload limiter increases safety.**
- **Robust, reliable and easy to maintain design.**

STANDARD FEATURES

- Silent pack Hatz Diesel engine
- 4 wheel drive
- 5° tilt alarm
- 24 V electrical control system
- 12 V - 95 Ah - battery
- Free wheeling device
- Electric emergency lowering system
- Safe use in winds up to 28 mph / 45 km/h
- Hourmeter
- Turret slewing lock rod
- Towing hooks / lifting eyes
- 2 hooks for safety harness in platform

OPTIONS & ACCESSORIES

- Large platform H23TPX (2.3 m x 0.8 m / 91 in X 32 in)
- 220V / 16A power line to platform
- Rotating beacon
- Flashing light
- Travel alarm
- Catalytic exhaust
- Encoded starting device
- On-board generator 3,3 kW
- Hot countries kit
- H23TPX : 250 kg (551 lb) of capacity with a wind up to 60 km/h (37 mph) (machine weight : 13,640 kg / 30,076 lb)

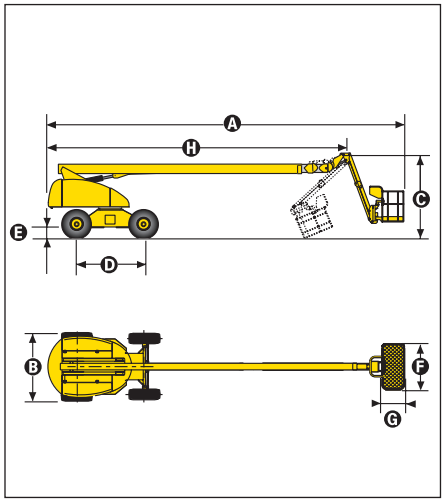

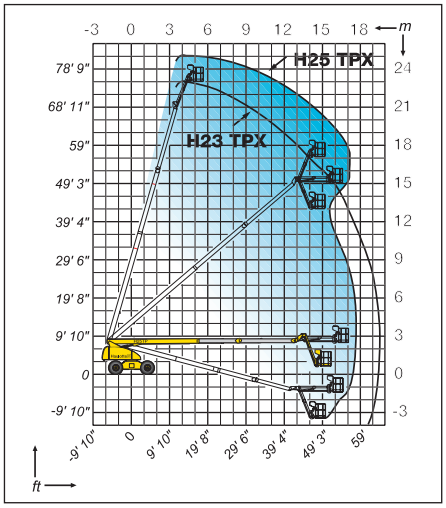

SPECIFICATIONS

	H23TPX	H25TPX
Working height	74 ft 2 in / 22.6 m	83 ft 0 in / 25.3 m
Platform height	67 ft 7 in / 20.6 m	76 ft 5 in / 23.3 m
Horizontal outreach	64 ft 2 in / 19.6 m	57 ft 1 in / 17.4 m
Platform capacity	507 lb / 230 kg	
Fly jib range of motion	140° (-70°/+70°)	
Jib length	7 ft 3 in / 2,2 m	7 ft 3 in / 2,2 m
Ⓐ Length	34 ft 9 in / 10,6 m	43 ft 0 in / 13.1 m
Ⓑ Width	8 ft 2 in / 2.48 m	8 ft 2 in / 2.48 m
Ⓒ Stowed height	9 ft 10 in / 3 m	9 ft 10 in / 3 m
Ⓓ Wheelbase	8 ft 2 in / 2,49 m	8 ft 2 in / 2.49 m
Ⓔ Ground clearance	13 in / 35 cm	13 in / 35 cm
Ⓕ x Ⓖ Platform size	71 in x 32 in / 1.8 m x 0.8 m	
Ⓗ Travel/transport length	26 ft 7 in / 8.1 m	35 ft 5 in / 10.8 m
Tailswing	42 in / 1.1 m	42 in / 1.1 m
Drive speed	0.9-3.1 mph / 1.5-5km/h	0.9-3.1 mph / 1.5-5km/h
Outside turning radius	20 ft 2 in / 6.15 m	20 ft 2 in / 6.15m
Turntable rotation (continuous)	360°	
Hydraulic platform rotation	180°	
Gradeability	40%	
Engine	Diesel Hatz 43.6 hp - 32.1 kW	
Controls	proportional	
Tyres (foram filled)	15 R 22	
Hydraulic tank	40 gallons / 150 l	
Fuel tank	40 gallons / 150 l	
Weight	28.908 lb / 13.110 kg	30.253 lb / 13.720 kg

AS1418.10

2420604630- Ed. 03/2006 - Copyright © by Pinguely-Haulotte – products specifications are subject to change without notice – non contractual pictures.

UK Platforms
POWERED ACCESS
PART OF HSS Hire

0845 450 1661