When the chosen torque value is exceeded by the screw the chuck stops turning and a 'rattling' sound will be heard, this is quite normal and is merely the torque limiting clutch operating.

The correct torque setting has been chosen when the screw is tightened firmly without damaging the head or burying the screw into the material, a certain amount of experimentation is required to find the correct setting. It is recommended to start at a low setting and work up.

The torque control settings should only be used for screw driving, (Gear 1).

When rotary drilling (Metal, plastics, and tile) select the drill bit logo on the control sleeve, and when hammer drilling (masonry) select the hammer logo for best results.

The rotation direction slider allows the Combi Drill to rotate the chuck in both the forward and reverse directions, this allows screws to be removed and drill bits to be un-jammed when necessary.

Check that the rotation direction is correct for the job you are doing by pressing the trigger gently before applying the Drill. **The Drill can be made safe (locked off) by selecting the mid-position of the slider**, to make changing bits less hazardous. **Remember to do this each time you change accessories to avoid injury.**

DO NOT make adjustments to the rotation direction or the torque setting while the drill is spinning, even if the power has been turned OFF.

To operate the Combi Drill, grip the drill firmly and squeeze the ON/OFF trigger switch, **the trigger switch is progressive and depressing it slowly will feed the power in slowly.**

When you are familiar with the controls, set the rotational selection slider to the middle position, insert the fully charged battery. The Combi Drill is now ready to use.

BASIC TECHNIQUES

Before starting work survey the work area for hidden services (electrical services, pipe-work etc) **if in doubt enquire at your HSS Hire Shop about a cable-avoiding tool.**

Mark up where you wish to drill or screw, remember the maxim; **measure twice, drill once.**

If you are drilling, select the correct bit for the material; make sure you only use high quality, sharp bits. **If you are in doubt contact your local HSS Hire Shop for advice.**

If you are driving in or removing screws, install the screwdriver bit with the correct type of head protruding.

When drilling, it is advisable to mark the hole to be drilled with a centre punch and to start the bit spinning just before it makes contact with the mark. **In some cases** (ie larger holes) **it will be necessary to make a pilot hole before making the final large hole.**

When driving in or taking out screws, place the screwdriver bit into the screw head and then apply the power.

When you have finished a work session, release the ON/OFF trigger switch, let the drill stop spinning, remove the bit and move the directional selection slider to the middle position. Place the drill in a safe place.

If when using the drill the power begins to fade the battery requires re-charging, remove the battery and recharge as described in the GETTING STARTED section.

EQUIPMENT CARE

Never push the equipment beyond its design limits. If it will not do what you want with reasonable ease, assume you have the wrong tool for the job. Ask at your local HSS Hire Shop for advice.

Keep the equipment clean, (especially the motor's ventilation slots). You will find this less of a chore if you do it regularly rather than wait until the end of the hire period. Always switch OFF the tool prior to cleaning.

Avoid working the tool continuously for long periods.

When not in use, remove bit and store the equipment somewhere clean, dry and safe from thieves.

FINISHING OFF

Switch OFF the drill then remove the bit (simply reverse the fitting procedure explained in GETTING STARTED), **set the rotational selection slider to the middle position and remove the battery**.

Clean the tool up as far as possible, paying special attention to the motor's ventilation slots.

Give the unit a final clean, assemble all the parts and repack them in the carry case ready for return to your local HSS Hire Shop.

...any problems

Contact your local HSS Hire Shop 0845 728 2828

We are here to help!

...any comments?

If you have any suggestions to enable us to improve the information within this guide please fax your comments or write to the Product Manager at the address below

Fax: 020 8687 5001

Group Office: 25 Willow Lane, Mitcham, Surrey CR4 4TS

Web Site: http://www.hss.com

Operating & Safety Guide 446

446/01

HSS Hire Shops

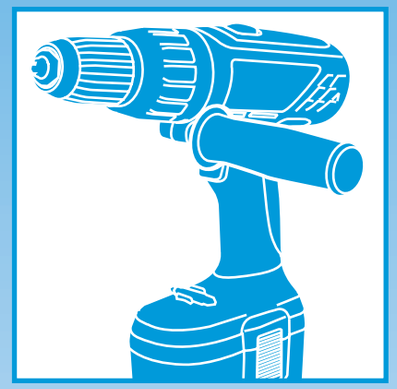

Combi Drill and Driver

A powerful 24V cordless drill and driver capable of drilling into wood, steel and masonry.

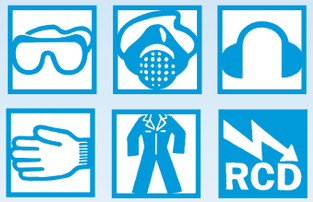

Code 02341

GENERAL SAFETY

For advice on the safety and suitability of this equipment **contact your local HSS Hire Shop.**

There is a serious risk of personal injury if you do not follow all instructions laid down in this guide.

The hirer has a responsibility to ensure that all necessary risk assessments have been completed prior to the use of this equipment.

This equipment should only be used by an operator who has been deemed competent to do so by his/her employer.

This equipment should be used by an able bodied, competent adult who has read and understood these instructions. Anyone with either a temporary or permanent disability, should seek expert advice before using it.

Keep children, animals and bystanders away from the work area. Cordon off a NO GO area using cones and either barriers or tape, available for hire from your local HSS Hire Shop.

Never use this equipment if you are ill, feeling tired, or under the influence of alcohol or drugs.

Safety goggles MUST be worn by everyone in the work area.

Some materials when cut contain substances which, when inhaled, can be harmful to health. A suitable mask must be worn when using this equipment.

This equipment generates potentially harmful noise levels. To comply with health and safety at work regulations, **ear defenders must be worn** by everyone in the vicinity.

Wear practical, protective clothing, gloves and footwear. Avoid loose garments and jewellery that could catch in moving parts, tie back long hair.

Always switch OFF the Drill prior to cleaning, checking or changing bits.

Having switched OFF the Drill, always wait for the bit to come to rest before putting it down.

Avoid contact with the drill bit, the cut surfaces and any swarf, immediately after drilling, as they will be very hot.

Ensure that the work area is well lit and ventilated, if in doubt, ask about lighting and ventilation equipment at your local HSS Hire Shop.

Do Not work near flammable gases or liquids, petrol or paint thinner for example. **Keep combustible materials at a safe distance** – at least 5m.

Always switch OFF the Drill when not in use. Never leave it switched ON and unattended.

Never carry or pull the charger by its power cable.

When working, **adopt a stable, well-balanced stance that lets you see what you are doing while leaving your hands and body behind the work** at all times.

Never use the Drill to drill into asbestos sheeting, nor any other material that may yield hazardous dust.

Take care when handling or fitting drill bits – they are sharp.

Check the equipment before use. If it shows signs of damage or excessive wear, return it to a HSS Hire Shop.

ELECTRICAL SAFETY

The charger for HSS Cordless Combi Drills and Drivers are designed to plug straight into a standard, 230V 13A power socket.

If the charger fails, or if its power supply cable or plug becomes damaged, **return it.** Never try to repair it yourself.

Keep cables out of harm's way, and clear of the work area.

Extension leads should be fully unwound and loosely coiled, away from the equipment. Never run them through water, over sharp edges or where they could trip someone.

To reduce the risk of electric shock, use a suitable RCD (Residual Current-Operated Device) available from your local HSS Hire Shop, or power the equipment from a mains circuit with a built-in RCD.

GETTING STARTED

The HSS Cordless Combi Drill and Driver requires the battery to be charged before use.

Remove the battery from the drill by pressing in the unlock buttons on either side of the battery and carefully slide out the battery.

To charge the battery, plug the charger into a power source and insert the battery as shown **in the battery charger** (see illustration).

The battery will take between one and two hours to charge.

A flashing green indicator lamp means charging is in progess, when the indicator lamp remains ON, the charging is complete.

To install the battery in the drill, set the rotational selection slider to the middle position and push the battery back into the drill handle ensuring that it is pushed fully home, this will be indicated by a 'clicking' sound.

Battery & Charger

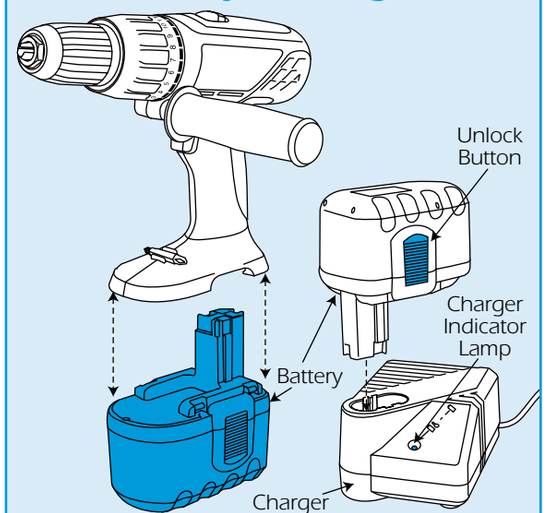

While the battery is charging take time to familiarise yourself with the controls.

Attach the auxiliary handle to either the left or the right side of the drill, depending on which is most suited to the job in hand.

The Combi Drill is fitted with a keyless chuck, **to insert a bit** (either drill or driver bit) **unscrew the chuck so that the jaws will accept the bit, insert the bit and turn the sleeve clockwise until a distinct notching is felt and heard.** The chuck is now locked.

To remove a bit from the chuck, **turn the sleeve of the chuck anti-clockwise and remove the bit.**

There are two methods of selecting speed on the Combi Drill, the first is via the gear change slider on top of the Drill – Low gear (1) for screwdriving and large diameter drilling – High gear (2) for small diameter drilling and Hammer drilling.

In Low gear the Drill will develop maximum torque (turning power) but with reduced rotational speed. In High gear while the Drill gives high rotational speeds, there is considerable less torque and so the Drill will be easier to stall**, resulting in possible damage to the battery and/or motor.**

Maximum Drilling Capacities

Material	Maxium Diameter
Wood	36mm
Masonry	17mm
Steel	14mm

Combi Drill and Driver

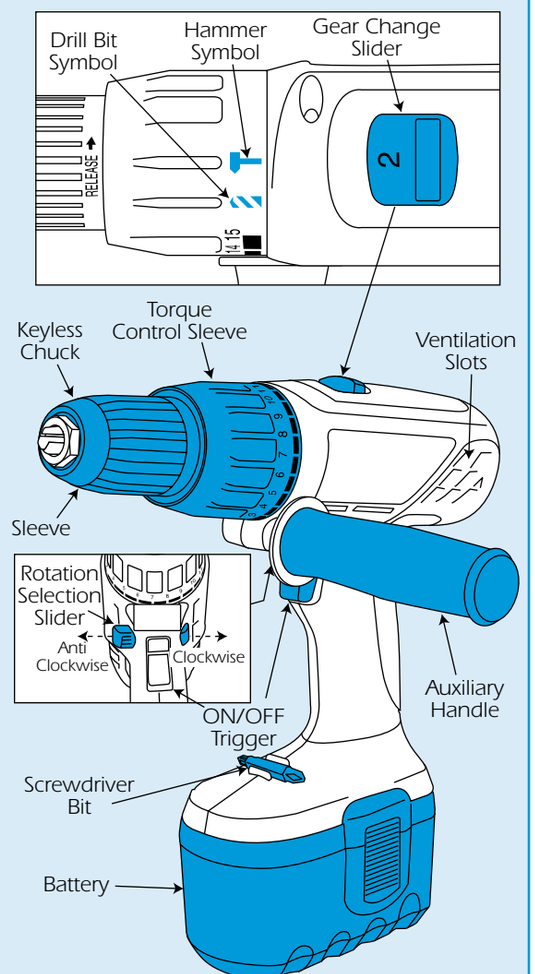

In any gear the trigger switch is progressive and allows the operator to start drilling slowly (by pressing gently on the trigger) to allow accurate starting of holes and good control when driving screws.

In any gear the torque (turning power) **of the Combi Drill can be pre-selected by turning the numbered torque control sleeve at the front of the Drill** – number 1 being the lowest torque setting for small screws / or soft materials and number 15 for larger screws / or harder materials.